PG500R Dimensional Drawings
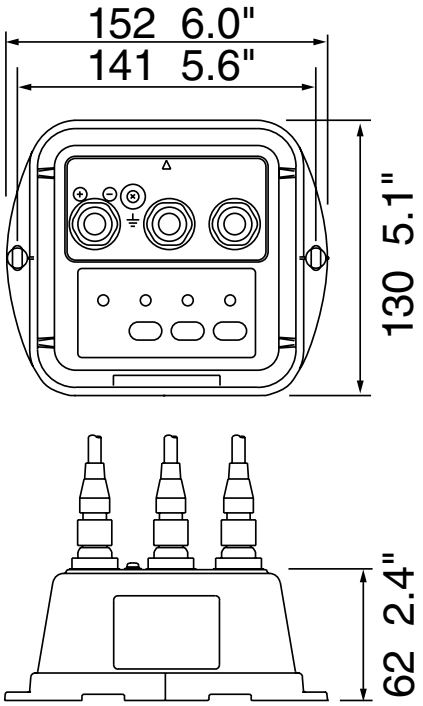
PG500R 0.3 kg 0.7 lb